CONSEW PARTS FOR MODEL 325

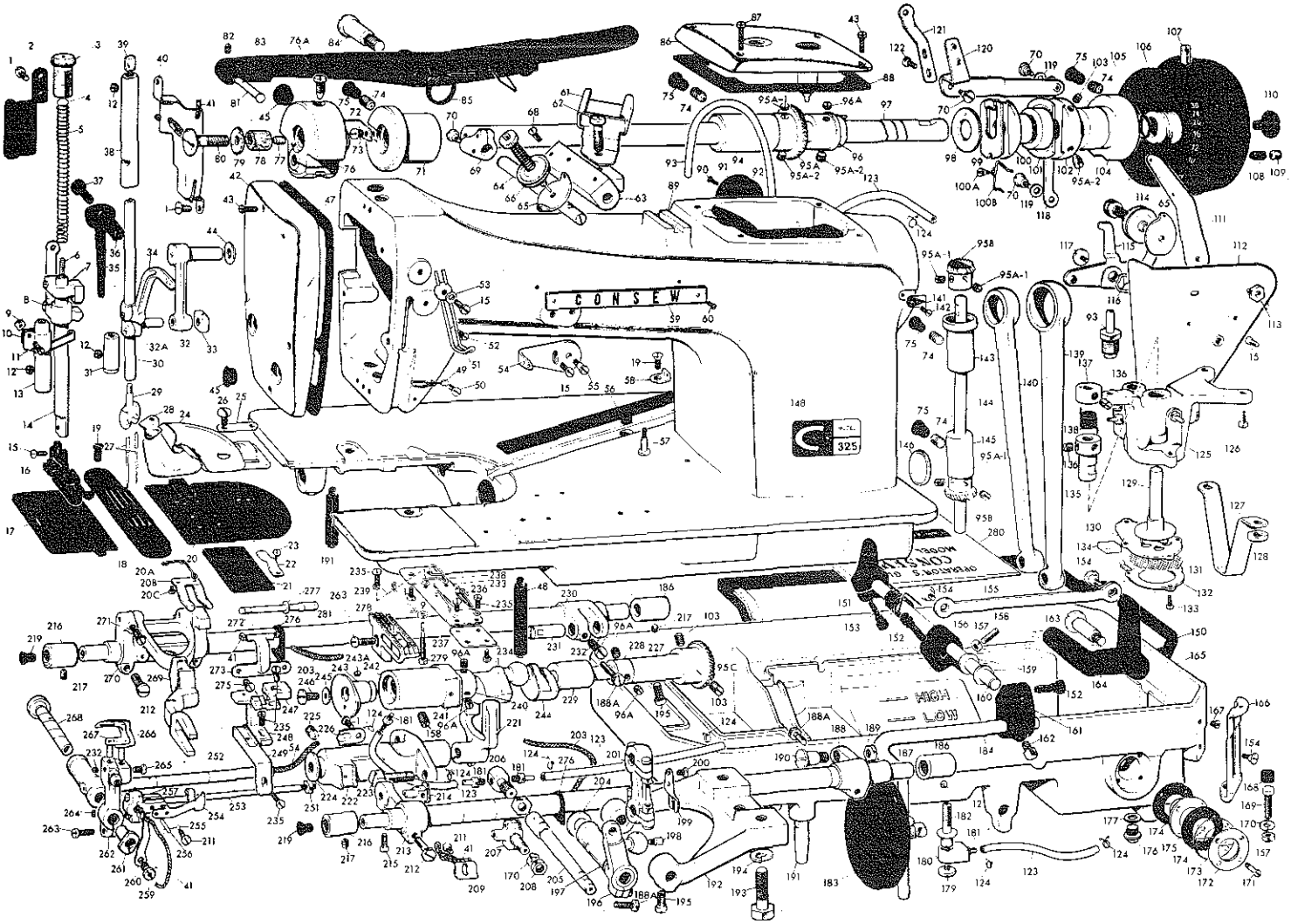

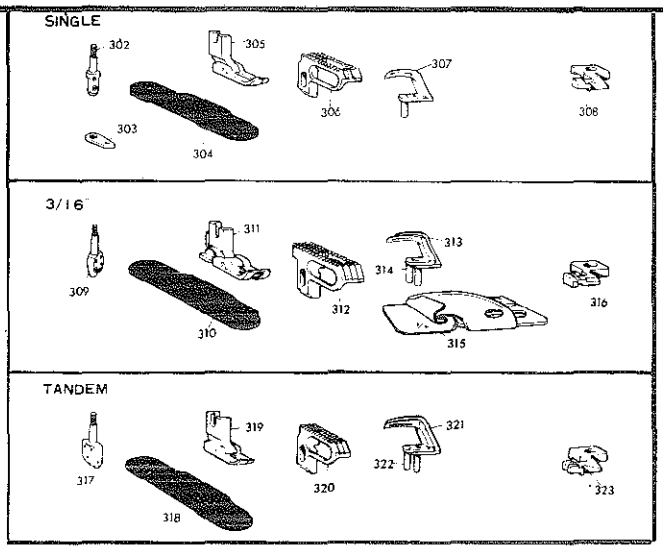

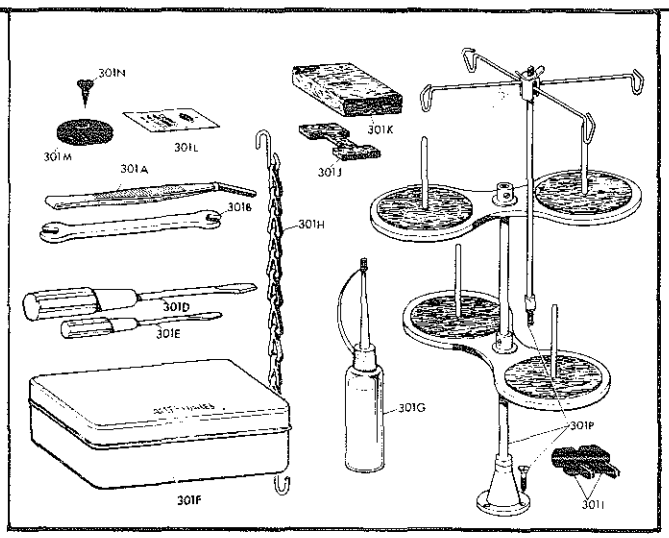

From the library of: Superior Sewing Machine & Supply LLC

CONSEW PARTS FOR MODEL 325

PART NO.	PART NAME
1	9540908-279 SET SCREW FOR 2, 40, ETC
2	2210101-263 OIL STOPPER
3	2110203-271-A PRESSURE REGULATOR SCREW
4	2110203-272-A PRESSURE REGULATOR ROD
5	2110203-213-B PRESSER SPRING, OUTER
6	2210103-214-A PRESSER SPRING, INNER
7	2210103-230 PRESSER BAR GUIDE BRACKET COMPLETE
8	2210103-240-A PRESSER BAR LIFTER COMPLETE
9	9440081-106 NUT FOR 11 & 279
10	2210106-424 HOSE RETAINER
11	9530801-279 CLAMP SCREW FOR 10
12	9501501-256 SET SCREW FOR 13, 31, ETC
13	2110203-215-A PRESSER BAR BUSHING
14	2210103-211-A PRESSER BAR ONLY
15	9540903-241 SET SCREW FOR 16, 54, ETC
16	2210103-220 HINGED FOOT COMPLETE (1/4")
17	2210103-120 SLIDE PLATE COMPLETE
18	2210103-111-A NEEDLE PLATE (1/4")
19	9561103-267 SET SCREW FOR 18 & 58
20	2210103-150-A ORNAMENT COVER PLATE
20A	2210103-154 SPRING A FOR 20
20B	2210103-155 SPRING B FOR 20
20C	9530907-107 SET SCREW FOR 20B
21	2210103-142 LAP SEAM FELLER SET PLATE
22	2210103-143 SPRING FOR 21
23	9540912-141 SET SCREW FOR 22
24	2210103-140 LAP SEAM FELLER COMPLETE (1/4")
25	2210103-141 PRESS PLATE FOR 24
26	9531106-119 SET SCREW FOR 25
27	2210102-195 NEEDLES (#16)
28	2210102-116 NEEDLE CLAMP THREAD GUIDE
29	2210102-170 NEEDLE CLAMP BODY (1/4")
30	2210102-111-A NEEDLE BAR ONLY
31	2110202-114-B NEEDLE BAR LOWER BUSHING
32	2210102-120-B NEEDLE BAR CRANK ROD COMPLETE
32A	2210102-101-A NEEDLE BAR BRACKET COMPLETE
33	2110202-122-A SLIDING BLOCK FOR 32A
34	2210102-021 TAKE UP LEVER COMPLETE
35	2210103-351 PRESSER BAR LIFTER LEVER
36	2110203-352 LOCK NUT FOR 35
37	9013400-012 HINGE SCREW FOR 35
38	2210102-113 NEEDLE BAR UPPER BUSHING
39	2110202-115-B OIL FELT FOR 38
40	2210106-391-A OIL WICK RETAINER
41	2210106-311 OIL WICK
42	2110201-231-C FACE COVER PLATE
43	9540907-207 SET SCREW FOR 42 & 86
44	2210102-215-A WASHER FOR 32
45	2120201-234 PLUG FOR 42
47	2110201-232-A GASKET FOR 42
48	2210101-152-A BED LEG FRONT
49	2210102-315 THREAD (NEEDLE) GUIDE, LOWER
50	9540904-101 SET SCREW FOR 49
51	2210102-323 THREAD (NEEDLE) GUIDE, UPPER
52	9013400-003 PREESS SCREW FOR 51
53	2210102-325 WASHER FOR 15
54	2210102-321 THREAD (NEEDLE) EYELET
55	9540903-241 HINGE SCREW FOR 54
56	2210101-205 THREAD (LOOPER) TUBE COMPLETE
57	9540913-119 HINGE SCREW FOR 56
58	2210102-328 THREAD (LOOPER) GUIDE
59	2110209-211 NAME PLATE
60	9540805-101 SET SCREW FOR 59
61	2210102-318-A THREAD (NEEDLE) GUIDE, ARM TOP
62	9531503-259 SET SCREW FOR 61
63	2210103-416-A TENSION (NEEDLE THREAD) BRACKET
64	2210103-413-A TENSION (NEEDLE THREAD) RELEASING SHAFT
65	2210102-371 TENSION (NEEDLE THREAD) THREAD GUIDE
66	2210102-350-B TENSION (NEEDLE THREAD) COMPLETE
68	9540903-259 SET SCREW FOR 64
69	2210103-407 TENSION (NEEDLE THREAD) RELEASING SHAFT CRANK
70	9015500-012 JOINT SCREW FOR 69, 120, ETC
71	2110204-112-B TOP SHAFT FRONT BUSHING
72	2210106-428 OIL HOSE RETAINER
73	9531101-264 SET SCREW FOR 72
74	9015600-006 SET SCREW FOR 71, 94, ETC
75	2110201-254 PLUG FOR SCREW HOLE
76	2210102-131 TAKE UP LEVER CRANK
76A	9013400-013 SET SCREW FOR 76
77	2110402-115 OIL FELT, INNER FOR 76
78	2210106-361 OIL FELT, OUTER FOR 76
79	2210104-119 PACKING FOR 80
80	2210104-121 TOP SHAFT FRONT CAP SCREW
81	2210103-246 KNEE LIFTER LEVER PIN
82	9501101-259 SET SCREW FOR 81
83	2210103-310-A KNEE LIFTER LEVER COMPLETE
84	9015500-038-B HINGE SCREW FOR 83
85	2210103-333 SPRING FOR 83
86	2110201-210-E TOP COVER PLATE
87	9540906-107 SET SCREW FOR 86
88	2110201-215-B GASKET FOR 86
89	2210101-100-E ARM BED COMPLETE
90	9560904-307 SET SCREW FOR 91
91	2110201-251 BACK COVER PLATE
92	2110201-252-A GASKET FOR 91
93	2110206-140 OIL FEED TUBE
94	2110204-113 TOP SHAFT CENTER BUSHING
95	2210104-012-A GEAR COMPLETE
95A	2110404-131-A TOP SHAFT GEAR COMPLETE
95A-1	9501602-276 SET SCREW (A) FOR 95A, 95C, ETC
95A-2	9501603-256 SET SCREW (B) FOR 95A, 96A, ETC
95B	2210104-263 VERTICAL SHAFT GEAR COMPLETE
95C	2210104-261-A BED ROTARY SHAFT GEAR COMPLETE
96	2110205-110-A FEED RACING CAM
96A	9501603-256 SET SCREW FOR 96, 228, ETC
97	2110204-111-C TOP SHAFT ONLY
98	2110205-114 FEED CAM RATCHET
99	2110205-115-A FEED CAM RATCHET STOP PIN
100	2110205-120-G FEED CAM COMPLETE
100A	9015500-001 SET SCREW FOR 100B
100B	2110205-122-E FEED CAM SPRING
101	2110205-151-C FEED CAM SLIDE BLOCK
102	2110205-152-A FEED CAM GUIDE
103	9501604-256 SET SCREW FOR 102 & 95C
104	2110204-114-A TOP SHAFT REAR BUSHING
105	9060100-006 PACKING FOR 106
106	2110204-151-A HAND WHEEL
107	9501503-276 SET SCREW FOR 106
108	2110604-118-A TOP SHAFT OIL STOPPER, REAR
109	9015600-004 SET SCREW FOR 108
110	2110604-152 CAP SCREW FOR 106
111	2210102-326 THREAD (LOOPER) UNCURLER
112	2210102-307 TENSION (LOOPER THREAD) THREAD GUARD
113	9440111-119 NUT FOR 114
114	2210102-360-A TENSION (LOOPER THREAD) COMPLETE
115	2210103-424 TENSION (LOOPER THREAD) RELEASER
116	9030300-003 SPRING WASHER FOR 115
117	9540915-104 SET SCREW FOR 115
118	2210103-423 TENSION (LOOPER THREAD) RELEASING LINK
119	9030100-024 WASBER FOR 70 & 118
120	2210103-422 TENSION (LOOPER THREAD) RELEASING ROD
121	2210103-418 TENSION (LOOPER THREAD) RELEASING ROD EXTENSION
122	9540904-119 ADJUSTING SCREW FOR 121
123	2110206-149 OIL HOSE
124	0251011-154-B CLIP FOR 123
125	2110206-110-D OIL PUMP BODY
126	9541201-256 SET SCREW FOR 125
127	2210101-151 BED LEG, RIGHT
128	9420201-119 NUT FOR 127
129	2110206-103 OIL PUMP IMPELLER
130	2110606-112 OIL PUMP COVER
131	2110606-114 OIL PUMP FILTER
132	2110606-115 OIL PUMP FILTER FRAME
133	9540903-259 SET SCREW FOR 132
134	2110206-116 MAGNET
135	2110206-121-A OIL RETURN CAM SHAFT
136	9501204-279 SET SCREW FOR 135
137	2110606-151 COLLAR FOR 138
138	2110606-152 SPRING JOINT
139	2110205-141 FEED ROCK CONNECTING ROD
140	2110205-161 FEED LIFTING CRANK ROD
141	2110201-243 STITCH LENGTH INDICATOR
142	9560904-307 SET SCREW FOR 141
143	2110204-242 VERTICAL SHAFT UPPER BUSHING
144	2210104-241-A VERTICAL SHAFT ONLY
145	2210104-243 VERTICAL SHAFT LOWER BUSHING
146	2110201-253 BED HOLE PLUG
148	2210119-411-A MODEL NUMBER PLATE
150	2210101-302 OIL PAN GASKET
151	2210103-362 KNEE LIFTER LOWER LEVER
152	9581601-207 CLAMP SCREW FOR 151 & 156
153	2210103-364 SPRING FOR 151
154	9015500-025 HINGE SCREW FOR 155 & 166
155	2210103-336 KNEE LIFTER ARM ROD
156	2210103-344 KNEE LIFTER CONTROLLER
157	9410151-219 NUT FOR 158 & 169
158	9501503-276 ADJUST SCREW FOR 156 & 242
159	2110203-343 WASHER FOR 161
160	2210103-363-A KNEE LIFTER SHAFT
161	2110203-341-B KNEE LIFTER ARM JOINT
162	9592002-159 SET SCREW FOR 161
163	9015500-039 HINGE SCREW FOR 164
164	2210103-335 KNEE LIFTER RELEASE LEVER
165	2210101-311 OIL PAN ONLY
166	2110201-321-A OIL PAN SUPPORT
167	9531203-119 GUIDE SCREW FOR 166
168	2110201-323 OIL PAN CUSHION RUBBER
169	2110201-322 OIL PAN HOLDING SCREW
170	9130600-108 SPRING WASHER FOR 169 & 208
171	9540810-104 SET SCREW FOR 172
172	2110201-315 OIL GAUGE WINDOW FRAME
173	2210101-316 OIL GAUGE WINDOW
174	2110201-317 OIL GAUGE WINDOW PACKING
175	2110201-318-A OIL GAUGE BASE
176	2110201-313-A DRAIN PLUG
177	2110201-314-B DRAIN PLUG PACKING
179	9531106 119 CAP SCREW FOR 180
180	2210106-169 OIL HOSE UNION
181	2110206-163 OIL HOSE NIPPLE
182	2210104-222 SET SCREW FOR 229
183	2110213-303 KNEE LIFTER PAD
184	2110203-342-C KNEE LIFTER ARM
186	2110205-232 REAR BUSHING FOR 187 & 281
187	2210105-251-B FEED LIFTING SHAFT ONLY
188	2110205-255-A FEED LIFTING BELL CRANK
188A	9581201-456 CLAMP SCREW FOR 188, 196, ETC
189	9410182-204 NUT FOR 190
190	9015500-036-A JOINT SCREW FOR 188
191	2210101-153-A BED LEG, REAR
192	2210101-171 LOOPER BALL CRANK HOLDER
193	9582002-427 SET SCREW FOR 192
194	9140800-306 SPRING WASHER FOR 193
195	9531501-256 SET SCREW FOR 205 & 227
196	2210104-305-A LOOPER BALL CRANK ARM COMPLETE
197	2210104-376-A LOOPER BALL CRANK
198	2210104-373 GUIDE SCREW FOR 199
199	2210104-372-B SWING STOPPER FOR 201
200	9540916-119 SET SCREW FOR 199
201	2210104-032-B LOOPER BALL CRANK CONNECTION
203	2210106-321 OIL WICK
204	9030100-013-A WASHER FOR 205
205	2210104-377-A HINGE PIN FOR 197
206	2210106-171 OIL HOSE UNION
207	2210104-033 PITMAN HEAD, RIGHT FOR 197
208	9410151-205 NUT FOR 207
209	2110206-343 OIL WICK RETAINER
211	9540905-319 SET SCREW FOR 209 & 254
212	9581201-456 CLAMP SCREW FOR 213 & 270
213	2120105-261-D FEED LIFTING BELL ARM
214	2110205-204 SLIDING BLOCK FOR 213
215	9541209-259 SET SCREW FOR 214
216	2110205-231 FRONT BUSHING FOR 187 & 281
217	9501508-276 SET SCREW FOR 216 & 186
219	2110205-252 PLUG FOR 187 & 281
221	2210104-306-A LOOPER AVOIDING ECCENTRIC FORKED CONNECTION
222	2210101-172 LOOPER HOLDER ROCK SHAFT SUPPORT
223	9581801-119 SET SCREW FOR 222
224	2210104-382-A BUSHING FOR 252
225	9501506-279 SET SCREW FOR 224
226	2210106-349 OIL WICK RETAINER
227	2210104-214 BED ROTARY SHAFT BUSHING, REAR
228	2210104-231 COLLAR FOR 244
229	2210104-213 BED ROTARY SHAFT CENTER BUSHING
230	2110215-281-A FEED ROCK SHAFT CRANK
231	2110205-282 HINGE PIN FOR 230
232	9531102-256 SET SCREW FOR 231 & 262
233	2210102-252 THREAD (LOOPER) TAKE UP STRIPPER PLATE
234	2210102-253 SUPPORT FOR 233
235	9540903-259 SET SCREW FOR 233, 239, ETC
236	2210102-254-A THREAD GUIDE, RIGHT FOR 233
237	2210102-255 THREAD GUIDE, LEFT FOR 233
238	2210102-256-B THREAD GUIDE, REAR
239	2210102-258 STRIPPER STAPLE FOR 233
240	2210104-304 LOOPER AVOIDING ECCENTRIC
241	2210104-385-A SLIDE BLOCK FOR 240
242	2210104-212 BED ROTARY SHAFT FRONT BUSHIN
243	2210102-250-B THREAD (LOOPER) TAKE-UP
243A	9501105-276 SET SCREW FOR 243
244	2210104-211-B BED ROTARY SHAFT
245	2210104-221-A PACKING FOR 246
246	9571201-102 SET SCREW FOR 245
247	2210102-151 NEEDLE GUARD (1/4" & 3/16")
248	2210102-152 NEEDLE GUARD HOLDER
249	2210102-153 NEEDLE GUARD HOLDER BRACKET
251	9440124-107 LOCK NUT FOR 253
252	2210104-381-A LOOPER HOLDER ROCK SHAFT
253	2210104-361 LOOPER BALL CRANK PITMAN ROD
254	2210104-362-A SPRING FOR 253
255	2210104-364 PIN CLASP FOR 256
256	2210104-363 PIN FOR 253
257	2210104-302 PITMAN HEAD, LEFT FOR 253
259	2210106-351 SET SCREW FOR 260
260	2210106-348 OIL WICK RETAINER
261	2210104-353 BUSHING FOR 262
262	2210104-351 LOOPER HOLDER
263	9541102-259 CLAMP SCREW FOR 262 & 278
264	9500904-256 OIL WICK SCREW
265	9531103-259 SET SCREW FOR 266
266	2210104-341 LOOPER REAR (1/4")
267	2210104-342 LOOPER FRONT (1/4")
268	2210104-352 HINGE PIN FOR 262
269	2210105-221 FEED BAR
270	2210105-211-C FEED BAR BELL CRANK
271	9531502-119 SET SCREW FOR 272
272	2110205-225-B FEED BAR SHAFT
273	2110606-345 OIL WICK RETAINER
275	9540806-106 SET SCREW FOR 273
276	2110205-233 RUBBER FLANGE
277	9030100-036 THRUST WASHER FOR 272
278	2210105-223 FEED DOG (1/4" & 3/16")
279	2210105-219 ADJUSTING SCREW FOR 278
280	2210119-111 OPERATOR'S GUIDE BOOK
281	2210105-271-A FEED ROCK SHAFT ONLY
ACCESSORIES	
301	0202021-110-F ACCESSORY COMPLETE
301A	0202073-161 PINCETTE
301B	0201033-122-C WRENCE, SMALL
301D	0101033-111-D SCREW DRIVER, LARGE
301E	0101023-112-C SCREW DRIVER, SMALL
301F	0102681-111-A ACCESSORY BOX
301G	0202012-110 TUBED OILER
301H	2210103-320 CHAIN
301I	0201065-173-A BED HINGE
301J	2210101-324 OIL FELT A
301K	2210102-319 OIL FELT B
301L	2210122-190 NEEDLES
301M	0211021-129-C BED HINGE SEAT
301N	0211011-154 WOOD SCREW FOR 301M
301P	0201086-130 COTTON STAND
SINGLE	
302	2210122-170 NEEDLE CLAMP BODY (SINGLE)
303	2210112-116 NEEDLE CLAMP THREAD GUIDE (SINGLE)
304	2210123-111 NEEDLE PLATE (SINGLE)
305	2210113-220 HINGED FOOT COMPLETE (SINGLE & TANDEM)
306	2210115-223 FEED DOG (SINGLE & TANDEM)
307	2210114-342 LOOPER (SINGLE)
308	2210122-151 NEEDLE GUARD (SINGLE)
3/16"	
309	2210152-170 NEEDLE CLAMP BODY (3/16")
310	2210153-111 NEEDLE PLATE (3/16")
311	2210143-220 HINGED FOOT COMPLETE (3/16")
313	2210144-341 LOOPER REAR (3/16")
314	2210154-342 LOOPER FRONT (3/16")
315	2210133-140 LAP SEAM FELLER COMPLETE (3/16")
TANDEM	
317	2210112-170 NEEDLE CLAMP BODY (TANDEM)
318	2210113-111-A NEEDLE PLATE (TANDEM)
321	2210114-341 LOOPER REAR (TANDEM)
322	2210114-342 LOOPER FRONT (TANDEM)
323	2210112-151 NEEDLE GUARD (TANDEM)

Use only exact parts number for ordering. Be sure indicate all digits and letters as indicated in listing.
Do not use position number from illustration for ordering.

From the library of: Superior Sewing Machine & Supply LLC